Birpai Local Aboriginal Land Council

CHIEF EXECUTIVE OFFICER

(Attractive Remuneration Package Negotiable)

The Birpai Local Aboriginal Land Council (BLALC) is seeking applications from experienced and motivated people interested in a rewarding career undertaking a new and challenging role of Chief Executive Officer.

This position holder will provide an extensive range of assistance and support to the elected Board through the day-to-day management of the Birpai's affairs in accordance with delegated authorities, the provision of sound and accurate advice and the implementation of the Board's resolutions in a timely and appropriate manner.

The successful applicant will have demonstratable knowledge and understanding of the ALRA, the capacity to interpret and implement legislation and sound communication skills. Organisational and management experience is essential together with an understanding of accounting practices and principles. A sound knowledge and appreciation of Aboriginal issues is also required.

All applicants must obtain a copy of the recruitment package containing the position description and selection criteria and address the selection criteria for their application to be considered. For a recruitment package please contact, Sandra Hindman by email: chair@birpailalc.org.au

Applications can be forwarded to chair@birpailalc.org.au marked "Confidential" and posted to:

The Chairperson
Birpai Local Aboriginal Land Council
Postal address: 14 Aston Street, Port Macquarie, NSW, 2444, PO Box 876
Email: chair@birpailalc.org.au

Applications close: 19th July 2026

"This is an identified position for Aboriginal and/or Torres Strait Islander peoples. Applicants must be able to demonstrate their Aboriginal and/or Torres Strait Islander heritage. This requirement is a genuine occupational qualification and is permitted under Section 14 of the Racial Discrimination Act 1975."

CALL FOR REGISTRATIONS - ABORIGINAL HERITAGE

Aboriginal community consultation for proposed redevelopment at Leppington

E & J International Investment Pty Limited is proposing to construct a built-to-rent residential development with associated retail uses at 122 Dickson Road Leppington, NSW. The project will be assessed as State Significant Development (SSD- 94455963).

Cultural Heritage Connections (CHC) has been engaged to prepare an Aboriginal Cultural Heritage Assessment Report (ACHAR), including Aboriginal consultation and an archaeological assessment for the proposed development. CHC is undertaking consultation with Aboriginal people according to the Heritage NSW's *Aboriginal cultural heritage consultation requirements for proponents*. Proponent contact details are c/- James Matthews, Director Pacific Planning Pty Limited - jmatthews@pacificplanning.com.au.

The purpose of community consultation with Aboriginal people is to assist with the preparation of an ACHA and, assist Heritage NSW to consider and determine decisions relating to the project, including any permits that may be required.

We invite Aboriginal people with cultural knowledge relevant to determining the significance of Aboriginal objects and/or places in the vicinity of these proposed works to register an interest in the process of community consultation regarding the proposed development.

Please register interest before 5 pm on16 July 2026 to:
Vanessa Hardy, Cultural Heritage Connections
PO Box 490, Dulwich Hill, NSW 2203
Email: vanessa@heritageconnect.com.au

CALL FOR REGISTRATIONS - ABORIGINAL HERITAGE

Aboriginal community consultation for proposed Zahra Grammar School Minto

Zahra Education Incorporated is proposing to construct a new school at 127 Eagleview Road (Lot 204, DP785818), Minto, NSW. Proponent contact details are Dr Gulzar Khan, Principal, Zahra Grammar School PO Box 5032, Minto NSW 2566. Email principal@zahragrammar.nsw.edu.au.

The proposed development is a new school including student facilities, library, canteen, multipurpose hall, staff room, ancillary and administration facilities etc. The site is 19,991 square metres in area and located within the City of Campbelltown Local Government Area (LGA).

The project is being assessed as State Significant Development - SSD-46134480. Consultation was previously undertaken in 2024 but revisions to the project have led to revised consultation.

The purpose of community consultation with Aboriginal people is to assist with the preparation of an Aboriginal Cultural Heritage Assessment (ACHA) and, assist Heritage NSW (Department of Planning and Environment) to consider and determine decisions relating to the project.

We invite Aboriginal people with cultural knowledge relevant to determining the significance of Aboriginal objects and/or places in the vicinity of these proposed works to register an interest in the process of community consultation regarding the proposed development.

Please register interest before 5 pm on16 July 2026 to:
Vanessa Hardy, Cultural Heritage Connections
PO Box 490, Dulwich Hill, NSW 2203
Phone: 0410 030 986
Email: vanessa@heritageconnect.com.au

Registration of Interest – Aboriginal Cultural Heritage Assessment (Blacktown LGA)

Coles Group Property Developments Ltd (contact Andrew La Martina, Andrew.laMartina@coles.com.au) is undertaking an Aboriginal Cultural Heritage Assessment Report for proposed project at 188 South St, Marsden Park (Lots 1 DP727975, 10 DP1215254, 17 DP609507, 24-26 DP1191512) (Blacktown LGA). The proposal comprises construction of a shopping centre. These works may result in an application for an Aboriginal Heritage Impact Permit (AHIP) under s90 of the *National Parks & Wildlife Act 1974*. The purpose of community consultation with Aboriginal people is to assist the proposed applicant in the preparation of an AHIP application, if required and to assist the Secretary of the Department of Climate Change, Energy, the Environment and Water in their consideration and determination of the application.

We are inviting Aboriginal people who hold knowledge relevant to determining the cultural heritage significance of Aboriginal objects and places in the area of the project to register an interest in consultation. If you would like to register, please respond by 15 July 2026 to Palimpsest Consultancy, PO Box 807, Marrickville NSW 1475 or fenella@palimpsest.au. Please provide the name of the group/individual, nominated contact person and contact details. We are required to provide details of all Registered Aboriginal Parties to Heritage NSW and the Local Aboriginal Land Council, unless otherwise advised. Please advise us if you do not wish your details to be released.

NOTICE OF PROPOSED GRANT OF EXPLORATION LICENCES

NATIVE TITLE ACT 1993 (CTH) SECTION 29

The Honourable Gerard Maley MLA, the Northern Territory Minister for Mining and Energy, C/- Department of Mining and Energy, GPO Box 4550 DARWIN NT 0801, hereby gives notice in accordance with section 29 of the *Native Title Act 1993* (Commonwealth) of his intent to do an act, namely to grant the following exploration licence applications.

Applications to which this notice applies:

Exploration Licence 34420 sought by BAUDIN RESOURCES PTY LTD, ACN 618 455 593 over an area of 227 Blocks (750 km²) depicted below for a term of 6 years, within the TAWALLAH RANGE locality.

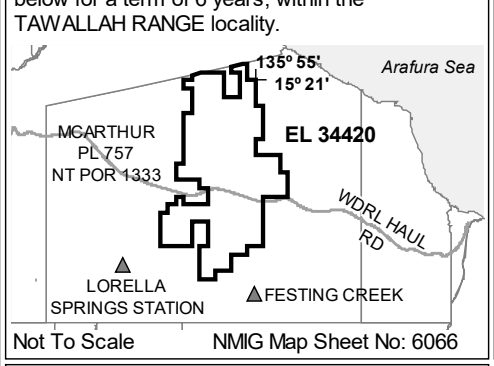

Not To Scale NMIG Map Sheet No: 6066

Exploration Licence 34332 sought by TECK AUSTRALIA PTY LTD, ACN 091 271 911 over an area of 250 Blocks (826 km²) depicted below for a term of 6 years, within the PINKERTON locality.

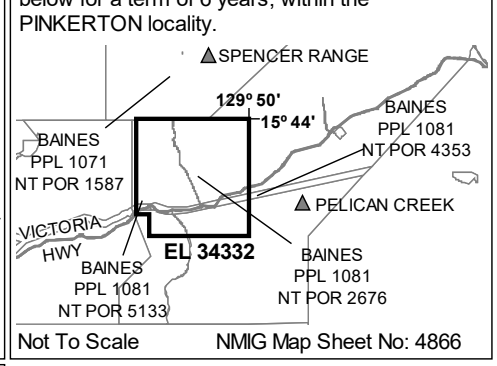

Not To Scale NMIG Map Sheet No: 4866

Exploration Licence 34334 sought by TECK AUSTRALIA PTY LTD, ACN 091 271 911 over an area of 250 Blocks (826 km²) depicted below for a term of 6 years, within the PINKERTON locality.

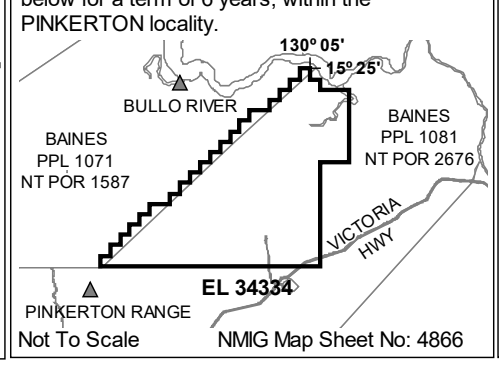

Not To Scale NMIG Map Sheet No: 4866

Exploration Licence 34335 sought by TECK AUSTRALIA PTY LTD, ACN 091 271 911 over an area of 197 Blocks (652 km²) depicted below for a term of 6 years, within the PINKERTON locality.

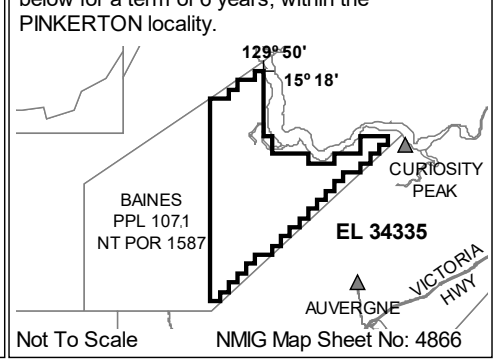

Not To Scale NMIG Map Sheet No: 4866

Exploration Licence 34337 sought by TECK AUSTRALIA PTY LTD, ACN 091 271 911 over an area of 208 Blocks (688 km²) depicted below for a term of 6 years, within the PINKERTON locality.

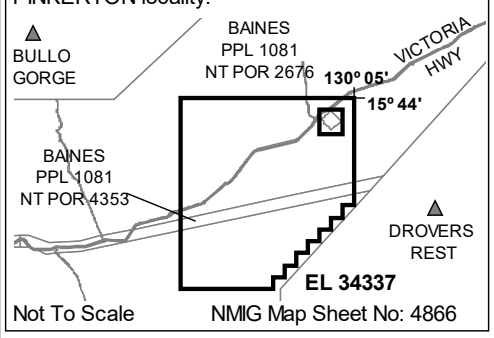

Not To Scale NMIG Map Sheet No: 4866

Nature of act(s): The grant of an exploration licence under the *Mineral Titles Act 2010* authorises the holder to conduct activities in connection with exploration for minerals for a term not exceeding 6 years and to seek renewal(s). The term for which it is intended to grant the mineral exploration licences referred to in this notice commences from the date of grant. Further information about the act may be obtained from the Department of Mining and Energy, GPO Box 4550 Darwin NT 0801 or Centrepoint Building 48-50 Smith Street Darwin NT 0800, telephone (08) 8999 5322.

Native Title Parties: Any person who is, or becomes a "native title party" within the meaning of the *Native Title Act 1993* is entitled to the negotiation and/or procedural rights provided in Part 2, Division 3, Subdivision P of the *Native Title Act 1993*. Under section 30 of the *Native Title Act 1993*, persons have until 3 months after the notification day to take certain steps to become native title parties in relation to this notice. Enquiries concerning becoming a native title party should be directed to the National Native Title Tribunal, GPO Box 9973, Brisbane QLD 4001, or telephone (07) 3307 5000.

Notification Day: 1 July 2026