Light Vehicle Inspection Manual

Appendix P Checking for Rust

NORTHERN TERRITORY GOVERNMENT

Appendix P - Checking for Rust

The extent of corrosion in a vehicle can range from light surface rust to the total breakdown of parent metal.

Depending on the individual vehicle's design, there are many different ways in which corrosion can begin and the degree to which a material or structure is attacked can vary widely. In general, though, the formation of rust and resultant loss of metal occurs in areas which retain moisture because (for example) of a build-up of road dirt and mud.

In order to simplify identification and classification when carrying out a motor vehicle inspection, this publication classifies the extent of corrosion in three different stages.

1. Light, powdery corrosion on the surface of a section of metal is termed surface rust and is sometimes the first indication of corrosion that can be observed; it should warn the owner of the vehicle to take steps for preventing the rust from spreading.

   Surface rust can occur on or behind any body panel of a vehicle particularly if the protective coating is scratched or damaged.

2. Surface rust, if left unattended, will develop into an advanced form of corrosion which can usually be seen as an eruption of oxidised metal, either on bare metal or under paint. This eruption occurs because the rust reaction involves an increase in volume so that pitting or bubbling of paint is the usual indication of penetration.

3. The final stage of the corrosion process is the formation of heavy encrustation of oxidised metal which completely replace the parent metal. This results in a hole or series of holes in the body panel or structural member of the vehicle when the rust is removed. This category of rust can usually only be rectified by replacement of the affected body panels and parts.

Vehicle structural components can be categorised according to their importance to safety. For instance, sub frames and other basic structural sections have to be absolutely free of rust because their failure could make a vehicle difficult to control and might cause it to crash. As already mentioned, such failures will also probably reduce the chances of survival in a crash.

This category includes any structure or component which, if it collapsed, would make the vehicle uncontrollable or would considerably reduce occupant safety in a crash. Examples of components in this category are illustrated below.

1. Main structural members such as sub frames and chassis rails.
2. Suspension mountings and parts.
3. Steering component mounting points.
4. Door sills and pillars.
5. Door hinges and latch mounting points.
6. Seat anchorage points.
7. Seat belt anchorage points.
8. All floor panels
9. Boot floor
10. Bulkheads

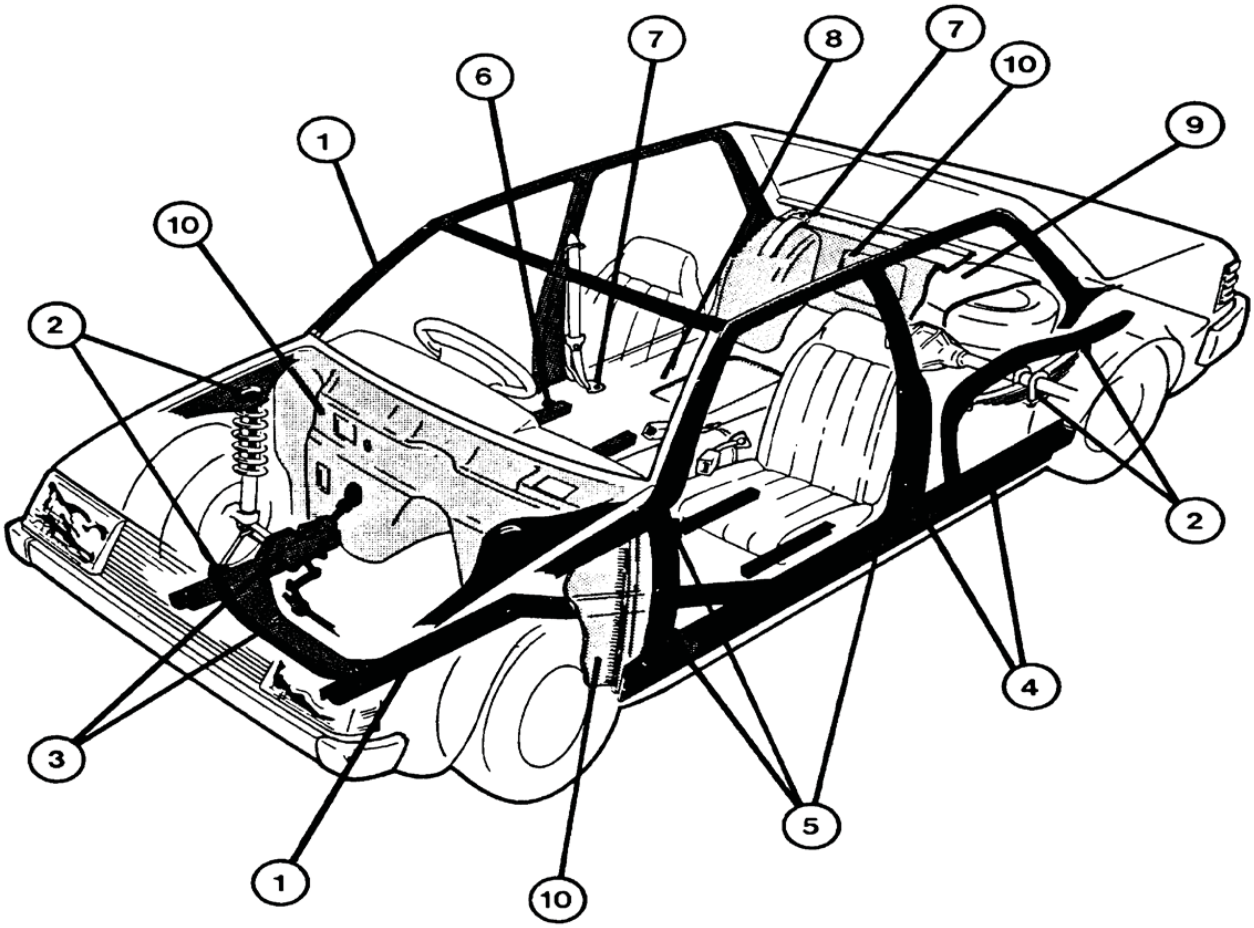

Figure 1.1

The second category includes any structure or component which, if it collapsed, would not immediately affect a vehicle's controllability or the protection provided by its built-in safety systems. Normally, surface rust or advanced rust would not be a cause for rejection in these components but extensive rust is usually either hazardous to persons in or near the vehicle because of its sharp edges or because exhaust fumes can get into the vehicle. In such cases, extensive rust, must therefore be rejected. The illustration below shows examples covered by this category.

1. Mudguards or fenders.
2. Roof.
3. Boot lid, bonnet and doors (areas within 100mm of mounting and locking points are primary structures and must be free of advanced or extensive rust).
4. Exhaust system.

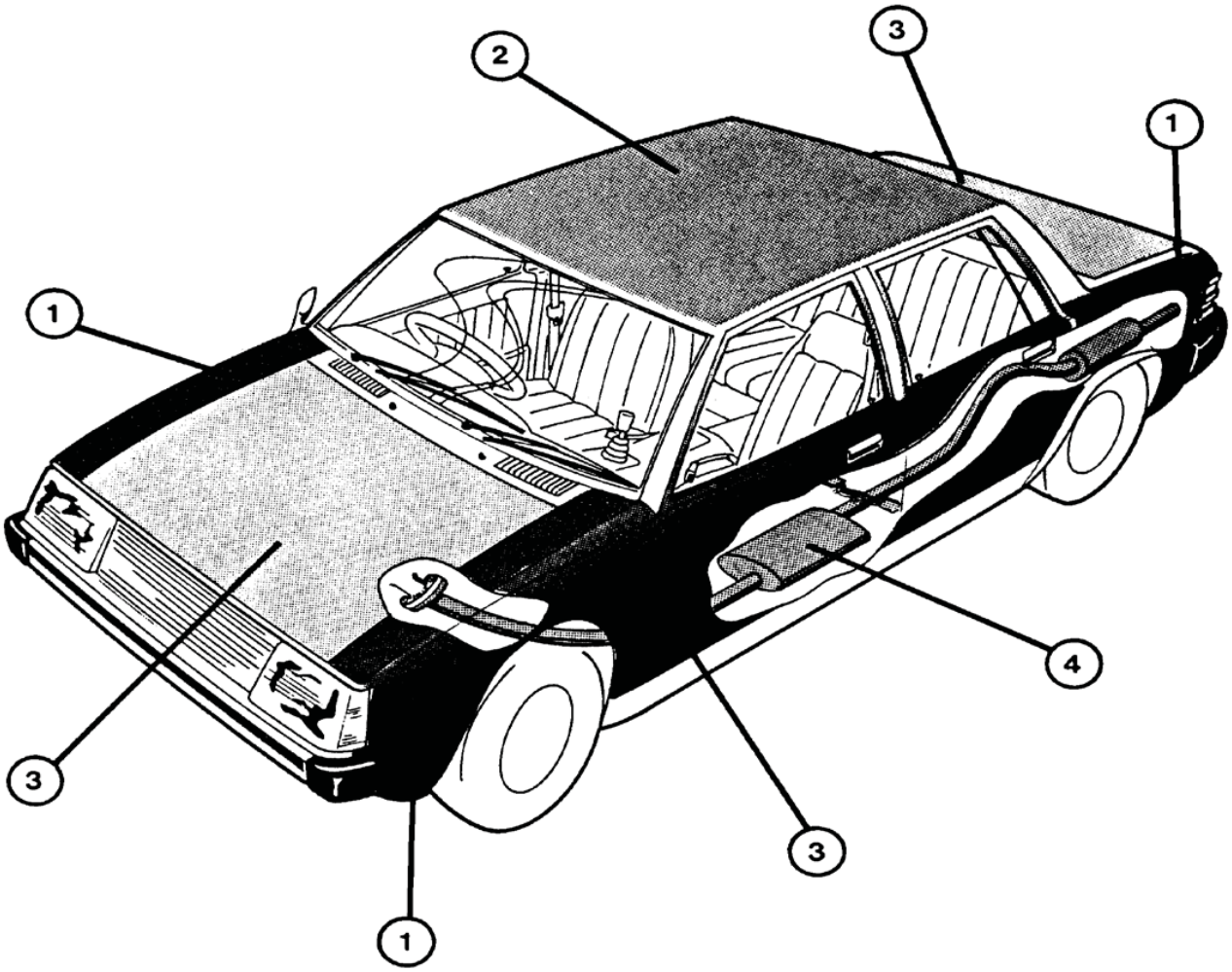

Figure 1.2

NOTE:

Because of differing structural designs, it might be difficult to categorise some vehicle components as primary or secondary structure. Where such difficulties are encountered, advice should be sought through Technical Officers to clarify any uncertainties that might be encountered